TRANSDUCER MOUNT FOR 1.5" DIAMETER CANS

MODEL - 8V6-27.150304

THIRD PARTY AGENCY APPROVAL CODE: N/A

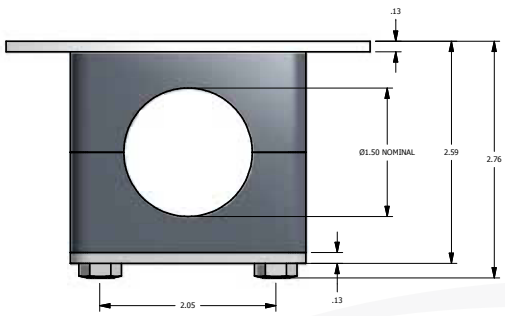

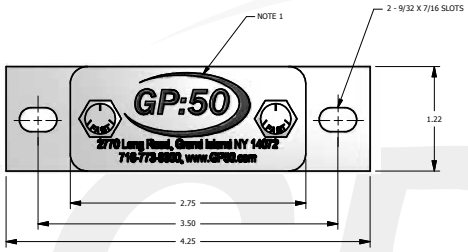

MOUNTING BRACKET DETAILS

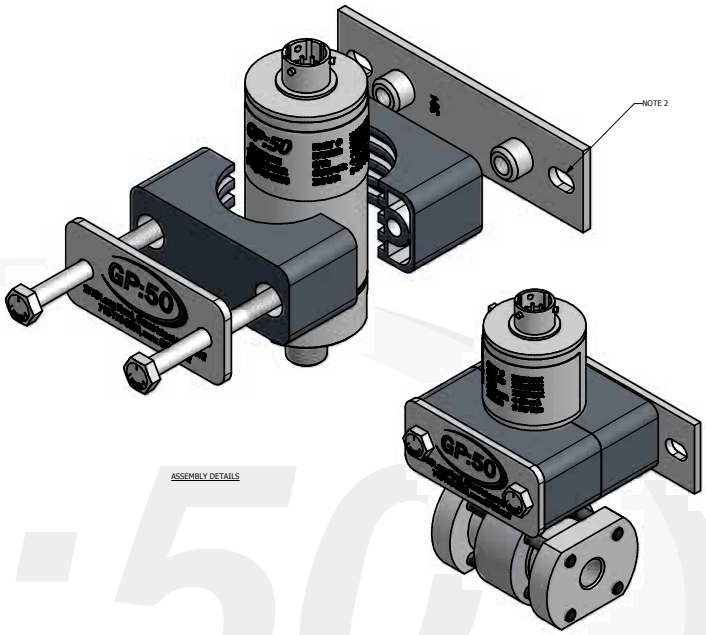

ASSEMBLY DETAILS

NOTES:

1. MARKING INFORMATION TO BE ADDED BY GP:50.

2. CUSTOMER TO SUPPLY MOUNTING SCREWS (NOT SHOWN).

3. MATERIAL:
   INSERT = POLYPROPYLENE
   METAL = 304 SST

THIS IS A CONTROLLED DRAWING AND MAY NOT BE CHANGED W/O ENGINEERING AUTHORIZATION

UNLESS OTHERWISE SPECIFIED DIMENTIONS ARE IN INCHES
TOLERANCES: FRACTIONS ± 1/64; DECIMALS: .xx ± .01, .xxx ± .005; ANGLES ± 1/2°
63-MACHINE FINISH (ALL SURFACES) REMOVE BURRS & BREAK SHARP EDGES 015 MAX. MACHINE FILLETS TO .015 R MAX. ALL DIAMETERS TO BE CONCENTRIC WITHIN .005 TIR MAX. CHAMFER ALL MALE THREADS 45°±5° TO MINOR DIAMETER CSINK ALL FEMALE THREADS 90°±10° TO MAJOR DIAMETER

REVISIONS			
LET	DATE	BY	ECN

GP:50 Aerospace Div.
CAGE CODE: 0NBY7
TEL. NO. (716) 773-9300

2770 LONG ROAD
GRAND ISLAND, NY 14072
FAX NO. (716 733-5019

SIZE:	MATERIAL	DRAWN BY:	DATE
11 X 17		JH	8/14/2009

REVIEW	DATE	REVIEW	DATE	APPROVED	DATE
		MM	9/8/2009	JH	9/8/2009

TITLE: TRANSDUCER MOUNT FOR 1.50" DIAMETER CANS

DRAWING NO. 8v6-27.150304

REV.